ACI
Automation Components, Inc.

Installation and Operation Instructions
A/6N1-ISO: Six Analog/Binary Inputs to One Analog Output

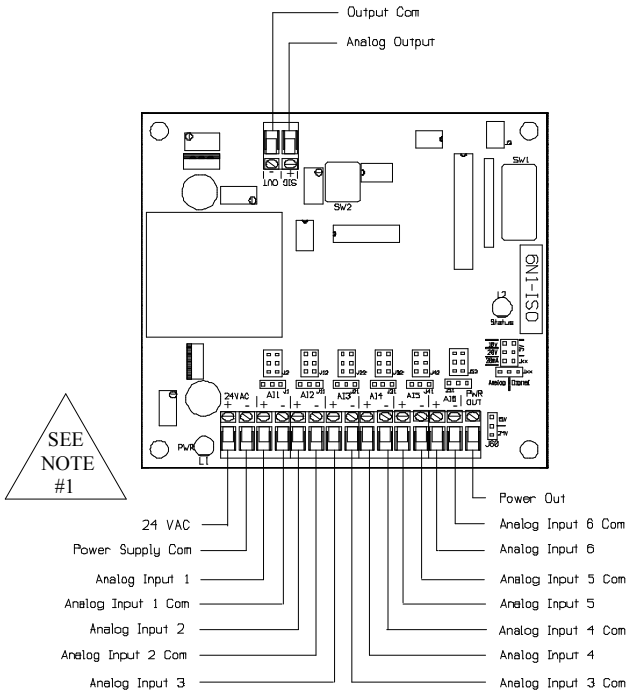

Default

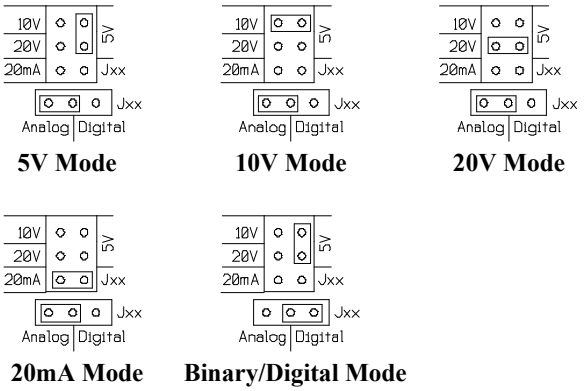

5V Mode **10V Mode** **20V Mode**

20mA Mode **Binary/Digital Mode**

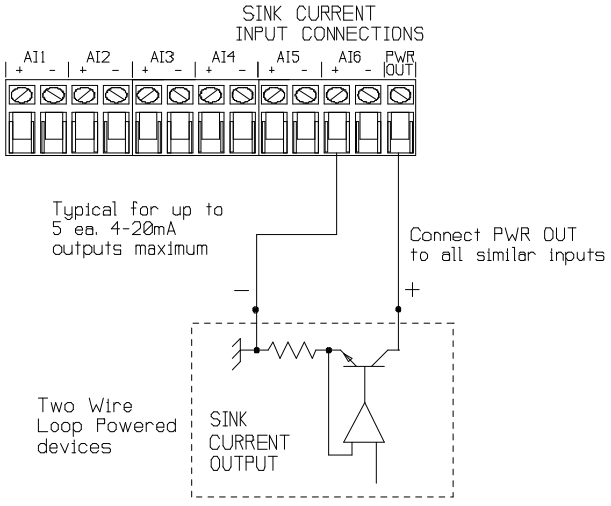

Typical Binary Inputs

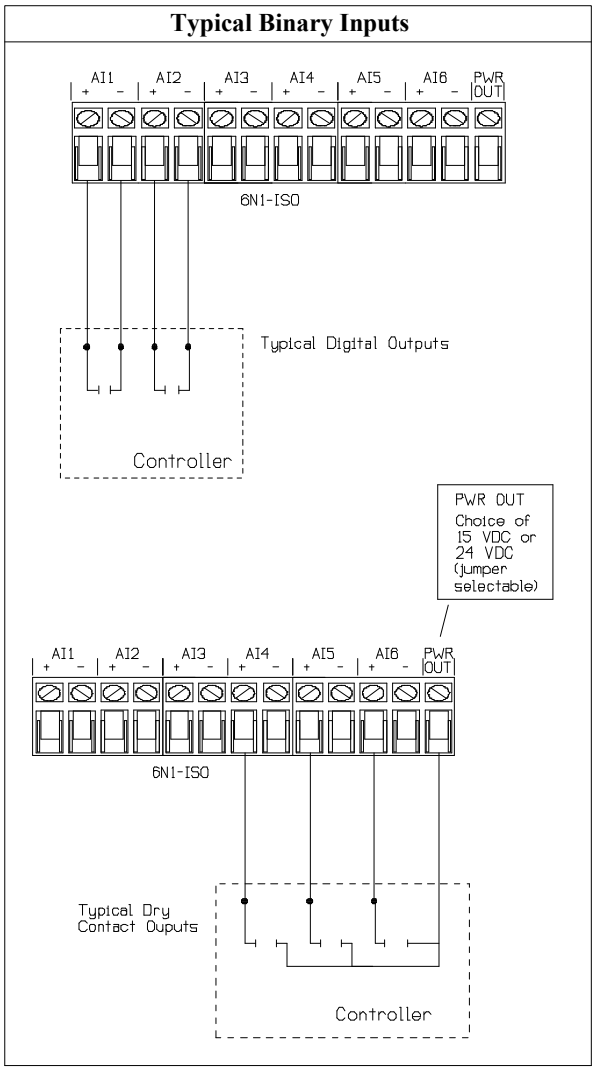

See page two for DIP switch settings

2305 Pleasant View Rd. ● Middleton Industrial Park ● Middleton, WI 53562
PH: (608) 831-2585 ● FAX (608) 831-7407
www.workaci.com

INSTALLATION

READ THESE INSTRUCTIONS BEFORE YOU BEGIN INSTALLATION.

Ground yourself before touching board. Some components are static sensitive.

MOUNTING:

Circuit board may be mounted in any position. If circuit board slides out of snap track, a nonconductive "stop" may be required. Use only fingers to remove board from snap track. Slide out of snap track or push against side of snap track and lift that side of the circuit board to remove Do not flex board or use tools.

POWER CONNECTIONS - THIS PRODUCT ACCEPTS 24 VAC POWER, 50/60 Hz.

Be sure to follow all local and electrical codes. Refer to wiring diagram for connection information.
Be sure to make all connections with power off.

1) AC Power - Refer to wiring diagram for connection information.

   Check the wiring configuration of any other loads that may be connected to this transformer. If required by BAS or controller specification, the 24 VAC neutral can be earth grounded at the transformer. Analog input, digital input, and analog output circuits should not be earth grounded at two points. Any field device connected to this transformer must use the same common. If you are not sure of other field device configuration, use separate transformers for isolation.

   If the 24 VAC power is shared with devices that have coils such as relays, solenoids, or other inductors, each coil must have an MOV, AC Transorb, or other spike snubbing device across each of the shared coils. Without these snubbers, coils produce very large voltage spikes when de-energizing that can cause malfunction or destruction of electronic circuits. Refer to wiring diagram for connection information.

2) You should measure the actual voltage output of the secondary. If the output is not fully loaded you may read a higher voltage than the circuit board can handle.

OPERATION

The 6N1-ISO can:

1) Read two to six analog inputs and output the **average.**
2) Read two to six analog inputs and output the **lowest.**
3) Read two to six analog inputs and output the **highest.**
4) Read analog input One and Two and output the **difference.**
5) Read up to 6 digital inputs (binary sequence) and output a proportional signal.

CALIBRATION, JUMPER AND DIP SWITCH SETTINGS

The 6N1-ISO output is factory calibrated in all four DIP switch selectable output ranges. Do not adjust the potentiometers on the 6N1-ISO as this may void any warranty.

INDIVIDUAL INPUT JUMPER SHUNT SETTINGS: See page 1. Factory default is analog, 0-10 VDC.

MODE DIP SWITCH SETTINGS - BLOCK SW1: Factory Default - All Off

MODE	DIPswx 1	DIPswx 2	DIPswx 3
Average	OFF	OFF	OFF
High	OFF	OFF	ON
Low	OFF	ON	OFF
Difference	OFF	ON	ON
Binary	ON	OFF	OFF

SWITCHES 7 & 8 NOT USED

Use Inputs 1 and 2 only for Difference

2305 Pleasant View Rd. ● Middleton Industrial Park ● Middleton, WI 53562
PH: (608) 831-2585 ● FAX (608) 831-7407
www.workaci.com

INPUTS USED DIP SWITCH SETTINGS - BLOCK SW1: Factory Default - All Off

INPUTS USED	DIPswx 4	DIPswx 5	DIPswx 6
1 & 2	OFF	OFF	OFF
1 thru 3	OFF	OFF	ON
1 thru 4	OFF	ON	OFF
1 thru 5	OFF	ON	ON
All	ON	OFF	OFF

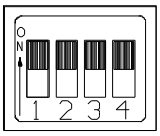

Legend: THESE switches are OFF.

If an invalid DIP switch selection is made, the status LED will blink at a rate of every two seconds.

OUTPUT TYPE DIP SWITCH SETTINGS - BLOCK SW2: Factory default is Voltage Out

OUTPUT TYPE	DIPswx 1	DIPswx 2
Voltage Out	OFF	ON
Current Out	ON	OFF

OUTPUT RANGE DIP SWITCH SETTINGS - BLOCK SW2: Factory default is 0-10 VDC

OUTPUT RANGE	DIPswx 3	DIPswx 4
0-5V/0-20mA	ON	OFF
0-10V	OFF	ON
0-20V	OFF	OFF

BINARY / DIGITAL MODE OPERATION:

The 6N1-ISO can have up to 6 digital inputs (binary sequence) and output a proportional analog signal.

The input signal can be either a 24 VDC, 15 VDC or 24 VAC signal. If the customer only has a contact closure output, the power out terminal must be used to provide the signal to the inputs.

LEGEND FOR A SELECT FEW BINARY INPUTS

INPUTS						**OUTPUT**
A6	**A5**	**A4**	**A3**	**A2**	**A1**	
0	0	0	0	0	0	0.00%
0	0	0	1	1	0	9.52%
0	0	1	1	0	1	20.63%
0	1	0	0	1	1	30.15%
0	1	1	0	0	1	39.68%
0	1	1	1	1	1	49.20%
1	0	0	1	0	1	58.73%
1	0	1	1	0	0	69.84%
1	1	0	0	1	0	79.37%
1	1	1	0	0	0	88.89%
1	1	1	1	1	1	100.00%

1 = signal applied to input

0 = no signal applied to input

Note: Only a select few Binary Inputs are shown due to the length and size of the data.

The output shown in the table is a general percentage. To get the actual output value, multiply the percent output value by the range of the output.

Range x Output Percentage = Output Value

Example: A 0-10 volt output range from the 6N1-ISO. The range is the maximum value; in this case it would be 10V, if your output percentage is 49.20%, your output equation would be 49.20% X 10V which equals 4.92V.

To figure out the output percentage for any given binary input, first convert your binary input number to a decimal number. Then take your decimal number and divide it by 63 (if all six input are set up to be used), then multiply that number by 100. The final result is you output percentage value.

2305 Pleasant View Rd. ● Middleton Industrial Park ● Middleton, WI 53562
PH: (608) 831-2585 ● FAX (608) 831-7407
www.workaci.com

Example: Binary input of 1 0 1 0 1 0 when converted to a decimal number is 42. So you have 42 / 63 which has a result of .6667. When multiplied by 100 you get an output percentage of 66.67%

If all six inputs are not used in the binary mode (for example, if you only have a 4 bit number you want to input) then you must first set the number of inputs used, by the appropriate DIP switch setting. To calculate the output percentage you first must calculate your maximum binary number in decimal form, in the case of a 4 bit number (1 1 1 1) it would be 15. You would use this number as your divisor in the equation.

Example: Binary input of 1 0 1 0 when converted to a decimal number is 10. So you have 10 / 15 which has a result of .6667. When multiplied by 100 you get an output percentage of 66.67%

WIRING CONNECTIONS - ANALOG

Connect Input Signal Common (-) to terminals labeled (-) labeled AI1 thru AI6.
Connect Input Signal (+) to respective terminal (+) labeled AI1 thru AI6.
Connect controlled device to SIG OUT (+) and (-).
Connect 24 VAC to terminals marked 24 VAC (+) and (-).

CHECKOUT

Apply power. Power LED will light and remain ON.

STATUS LED OPERATION

Status LED will blink at a very fast rate when 6N1-ISO is first powered up. After approximately 2 seconds the LED will blink at a rate of approximately twice per second (change of state every 200 ms) indicating microprocessor is functioning properly.

If the LED is blinking at a rate of once every two seconds (change of state twice per second) an invalid DIP switch setting is selected.

Power Supply Voltage:	24 VAC (+/- 10%), 50/60 Hz	Power Consum ption:	255 mA maximum
Power Output Terminal:	24 VDC or 15 VDC (Jumper selectable) 100 mA maximum	Analog Output Resolution: Binary Output Resolution:	+/- 2% full scale 64 steps of resolution
Input Signal Impedance:	0-5 VDC - 1M ohms 0-10 VDC - 20.000 ohms 0-20 VDC - 10,000 ohms 0-20 mA - 249 ohms	Output Signal Impedance:	Voltage - 1,000 ohms minimum Current - 500 ohms maximum

2305 Pleasant View Rd. ● Middleton Industrial Park ● Middleton, WI 53562
PH: (608) 831-2585 ● FAX (608) 831-7407
www.workaci.com